Multi-Flash Square Vent Master Flash®

INSTALLATION GUIDE

Retrofit Applications

Two applications three sizes
One Design • Multiple Functions

Advanced Ozone Resistance tested to...		EPDM 70 hour @ 500 pphm	HIGH TEMP RED SILICONE 70 hour @ 500 pphm
High Temperature Resistance Tested to	Intermittent Continuous	+135°C (+275°F) +100°C (+212°F)	+260°C (+500°F) +225°C (+437°F)
Low Temperature Resistance tested to...		– 55°C (-67°F)	– 74°C (-101°F)
Compression Set Maximum...		25%	50%

*Complete specification data and testing methods are available upon request.

Design for the Metal Roofing Industry
For both standard or retrofit applications

Weather Protection
Made of EPDM or High Temp Red Silicone,
These flashings are compounded specifically for maximum resistance to weathering due too zone and ultraviolet light.

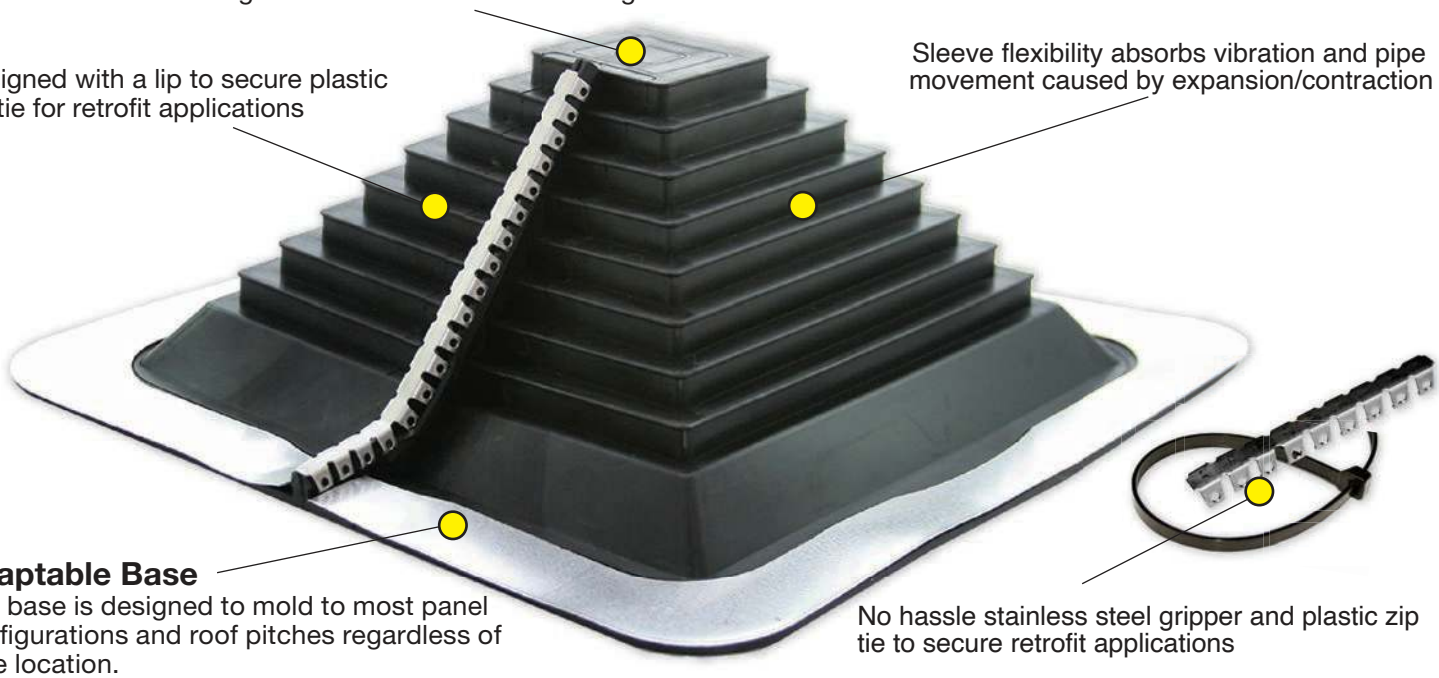

Designed with a lip to secure plastic zip tie for retrofit applications

Sleeve flexibility absorbs vibration and pipe movement caused by expansion/contraction

Adaptable Base
The base is designed to mold to most panel configurations and roof pitches regardless of pipe location.

No hassle stainless steel gripper and plastic zip tie to secure retrofit applications

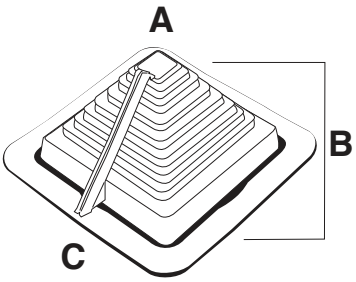

Multi-Flash Square Vent Closed Top

	COMPOUND	PART NO.	FLASHING DETAILS
#1	Black EPDM	MFSQ101BA	A-Top opening diameter - Closed B-Standard Closed- 5” (0 - 125mm) Retrofit 3/4” - 4-1/2” (20 - 115mm)
	Red Silicone	MFSQ102RA	C-Base dimensions - 8” (203mm)
#2	Black EPDM	MFSQ201BA	A-Top opening diameter - Closed B-Standard Closed- 10” (0 - 254mm) Retrofit 7/8”- 9-5/16” (22 - 237mm)
	Red Silicone	MFSQ202RA	C-Base dimensions - 14-1/4” (361mm)
#3	Black EPDM	MFSQ301BA	A-Top opening diameter - Closed B-Standard Closed- 19-1/8” (0 - 487mm) Retrofit Closed - 17-1/2” (0 - 444 mm)
	Red Silicone	MFSQ302RA	C-Base dimensions - 24-3/4” (628mm)

Multi-Flash Square Vent Master Flash®

INSTALLATION GUIDE

Retrofit Applications

Multi-Flash Square Vent Size and Trimming

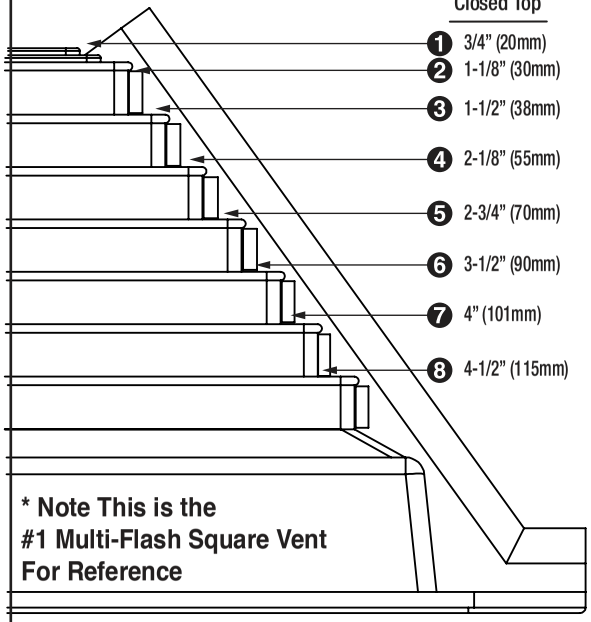

Multi-Flash Square Vent Pipe Range

	#1 Closed Top	#2 Closed Top	#3 Closed Top
1	3/4" (20mm)	7/8" (22mm)	11" (279mm)
2	1-1/8" (30mm)	1-7/8" (47mm)	11-7/8" (301mm)
3	1-1/2" (38mm)	2-5/8" (66mm)	12-5/8" (320mm)
4	2-1/8" (55mm)	3-9/16" (90mm)	13-3/4" (349mm)
5	2-3/4" (70mm)	4-1/2" (115mm)	14-5/8" (371mm)
6	3-1/2" (90mm)	5-1/2" (139mm)	15-5/8" (396mm)
7	4" (101mm)	6-7/16" (146mm)	16-5/8" (422mm)
8	4-1/2" (115mm)	7-7/16" (188mm)	17-1/2" (444mm)
9		8-3/8" (213mm)	
10		9-5/16" (237mm)	

Closed Top

1. 3/4" (20mm)
2. 1-1/8" (30mm)
3. 1-1/2" (38mm)
4. 2-1/8" (55mm)
5. 2-3/4" (70mm)
6. 3-1/2" (90mm)
7. 4" (101mm)
8. 4-1/2" (115mm)

* Note This is the #1 Multi-Flash Square Vent For Reference

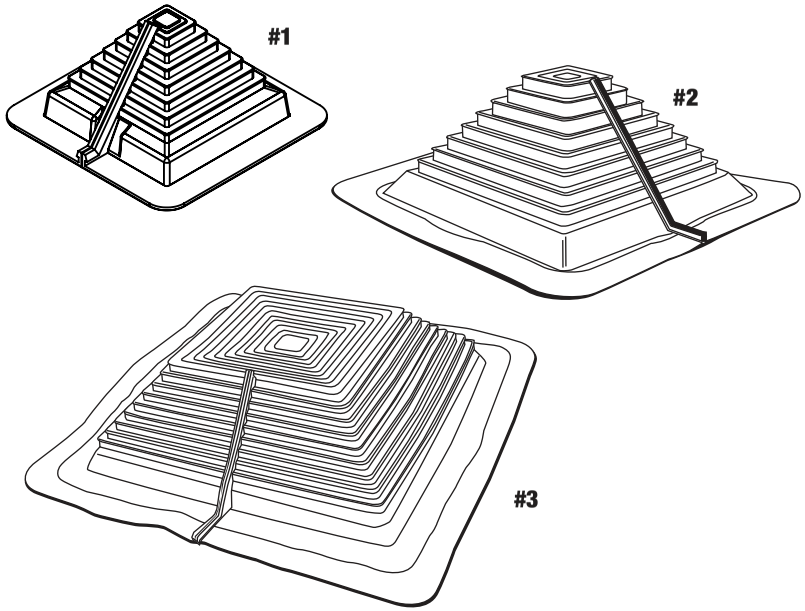

****Base Dimension:**

#1 8" (203mm) **I #2** 14-1/4" (361mm) **I #3** 24-3/4" (628mm)

Retrofit Applications

5 Easy Steps Installation Materials: Multi-FlashSquare Vent Master Flash® | Gripper | Pliers | Fasteners | Washers | Zip Tie | Snips/Scissors Measuring Tape | Marker/Pencil | Sealant

Measure & Trim

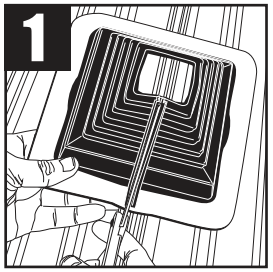

Wrap & Form

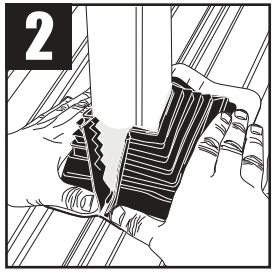

Seal & Crimp

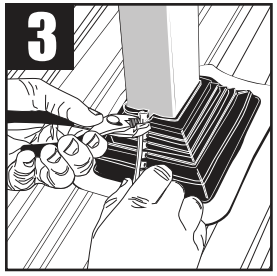

Fasten

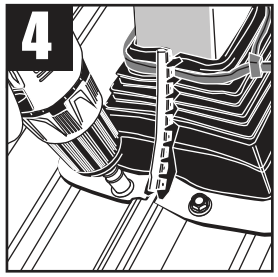

Complete

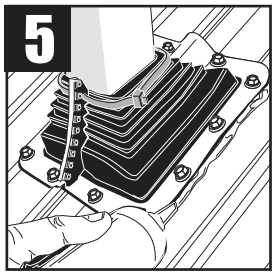

Roof Pitch Calculator
https://rpc.aztecwasher.com

* Find pipe size in table and trim Multi-Flash Square vent Master Flash® as shown on outline. • Use one size larger Multi-Flash Square Vent Master Flash® on steep roofs or deep corrugation.
* Cut the flashing at least 20% less then the pipe Outer Diameter

Note: Properly install the base with Master Seal® Bonded Washers and fasteners. Fasteners should be 1"– 1-1/2" apart around the entire base for a tight secure seal.

Installation Video: http://www.aztecwasher.com/installationvideos

Multi-Flash Square Vent Master Flash® is a product of Aztec Washer Company 4/2020